REVISIONS						
ZONE	LTR	DESCRIPTION	CHANGE No	DATE	BY	APPR'D
	A	INITIAL RELEASE	73408	08JUL11	SLK	BK

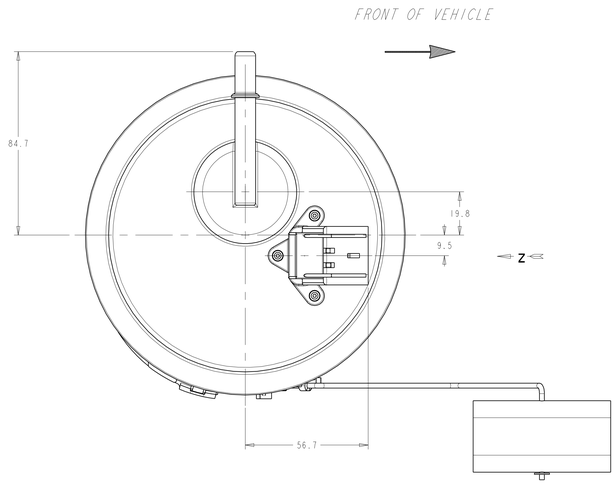

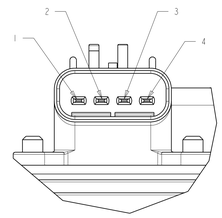

VIEW IN DIRECTION
OF ARROW "Z"
SCALE 2:1

CONNECTOR WIRING			
LOCATION	FUNCTION	COLOR	WIRE GAUGE MINIMUM
1	PUMP GROUND	BLACK	14
2	SENSOR GROUND	BROWN	20
3	SENSOR SIGNAL	BROWN	20
4	PUMP +	RED	14

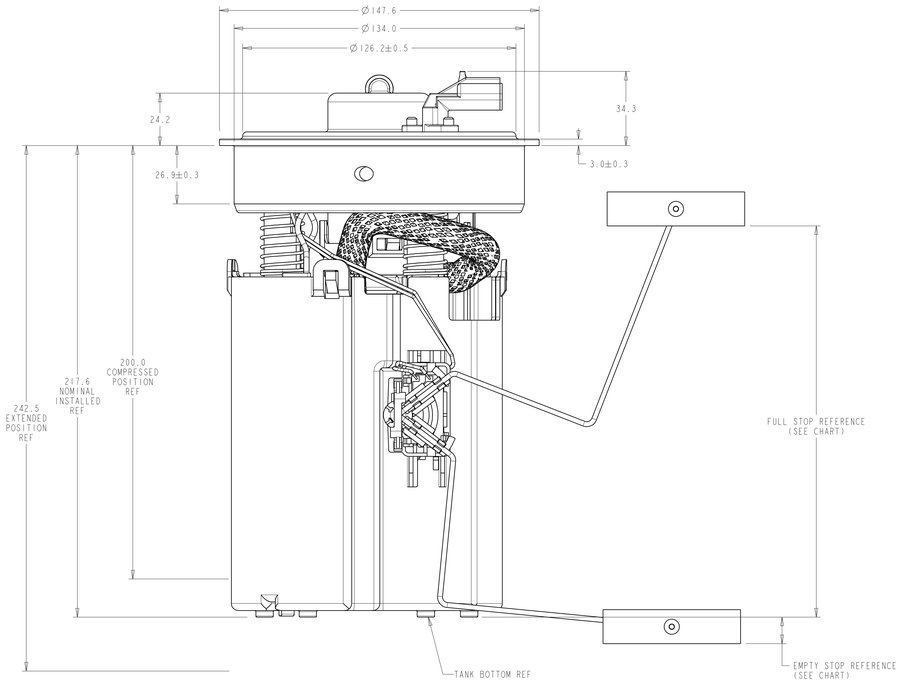

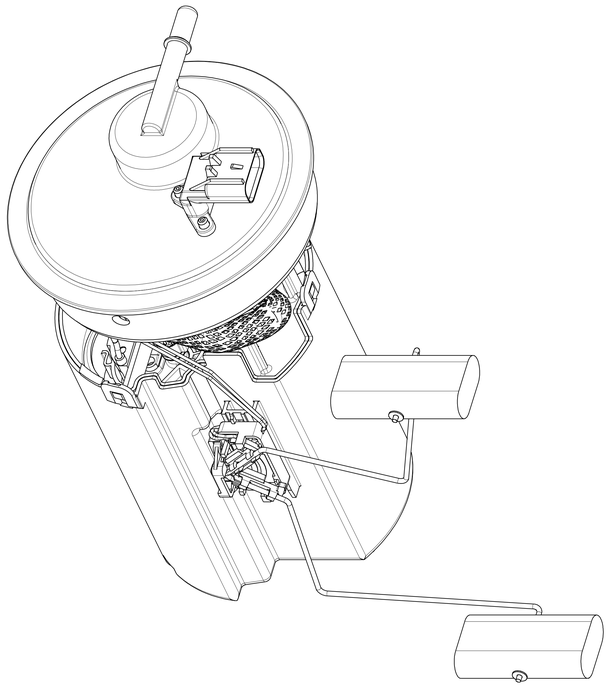

LEVEL UNIT				
RESISTANCE VS. FLOAT HEIGHT				
POINT	HEIGHT (mm) BASIC	RESISTANCE		
		NOMINAL	UPPER LIMIT	LOWER LIMIT
ES	-13.3	70.0	74.0	63.0
EMPTY	0.0	82.6	90.9	74.4
FULL	168.7	1025.9	1037.9	1013.8
FS	179.6	1050.0	1054.0	1043.0

NOTE:

1. FUEL MODULE IS SHOWN IN INSTALLED POSITION. TRAVEL FROM THIS POSITION IS +17.6 / -24.9

TI AUTOMOTIVE CONFIDENTIAL AND PROPRIETARY
THIS DRAWING IS PROPERTY OF TI AUTOMOTIVE. TI AUTOMOTIVE CLAIMS PROPRIETARY RIGHTS IN THE INFORMATION MATTER SHOWN AND DESCRIBED ON THIS DRAWING. ALL RIGHTS INCLUDING PROPRIETARY RIGHTS ARE RESERVED. NO RIGHTS ARE GRANTED EXPRESS OR IMPLIED. THIS DRAWING IS IN CONFIDENCE. THIS DRAWING SHALL NOT BE DISCLOSED TO OTHERS OR USED FOR THE PURPOSE OF MANUFACTURE OR OR PROCUREMENT FROM OTHERS OF THE ARTICLE OR PART SHOWN WITHOUT TI AUTOMOTIVE'S EXPRESS WRITTEN CONSENT. NO LICENSE OR OTHER RIGHTS IS GRANTED TO USE OR SHOW THIS DRAWING TO RECIPIENT.
COPYRIGHT, TI AUTOMOTIVE 2010. ALL RIGHTS RESERVED.

METRIC
ALL DIMENSIONS ARE IN MILLIMETERS

DO NOT SCALE
DECIMAL TOLERANCES UNLESS OTHERWISE SPECIFIED
ONE PLACE ±0.25 TWO PLACE ±0.13 ANGLES ±1°

THIRD ANGLE PROJECTION

DIMENSIONS IN ACCORDANCE WITH ASME Y14.5 - 2009

TI Automotive
630 COLUMBIA ST.
CARO, MI 48723
+1 989.673.7727

ENGINEER	B.KLINKMAN	08JUL11	MATERIAL/SPECIFICATION: N/A
DES.MANAGER	S.KADY	08JUL11	
DESIGNER	S.KADY	08JUL11	
CAD SYSTEM: PRO/E	SCALE: 1:1	SHEET NO. 1 OF 1	
REFERENCE (D/REV.): CAD DWG: AR0030458/AA		PLM REFERENCE/REV.: PRODUCT: 000106594/AA	
REFERENCE (D/REV.): CAD ASM: AR0030459/AA		PLM REFERENCE/REV.:	
DRAWING NAME: FUEL MODULE ASM - PT44 AFTERMARKET			
SIZE: A0	DRAWING NO./REV.: TU148		